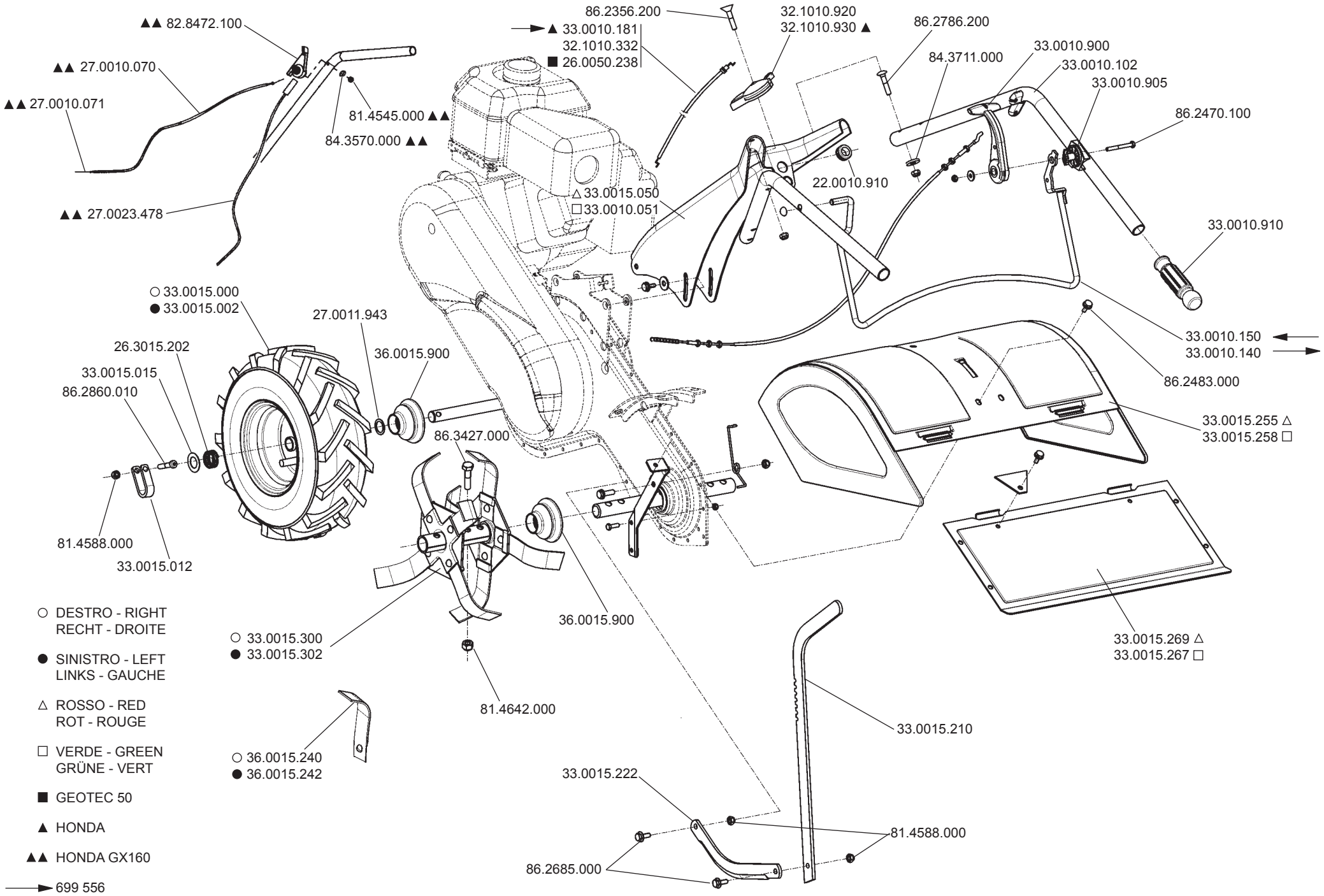
▲▲ 82.8472.100
▲▲ 27.0010.070
▲▲ 27.0010.071
81.4545.000 ▲▲
84.3570.000 ▲▲
▲▲ 27.0023.478
86.2356.200
▲ 33.0010.181
32.1010.332
■ 26.0050.238
32.1010.920
32.1010.930 ▲
86.2786.200
84.3711.000
33.0010.900
33.0010.102
33.0010.905
86.2470.100
22.0010.910
△ 33.0015.050
□ 33.0010.051
33.0010.910
○ 33.0015.000
● 33.0015.002
27.0011.943
26.3015.202
33.0015.015
86.2860.010
36.0015.900
86.3427.000
33.0010.150
33.0010.140
86.2483.000
33.0015.255 △
33.0015.258 □
81.4588.000
33.0015.012
36.0015.900
33.0015.269 △
33.0015.267 □
○ 33.0015.300
● 33.0015.302
81.4642.000
33.0015.210
○ 36.0015.240
● 36.0015.242
33.0015.222
81.4588.000
86.2685.000
○ DESTRO - RIGHT
RECHT - DROITE
● SINISTRO - LEFT
LINKS - GAUCHE
△ ROSSO - RED
ROT - ROUGE
□ VERDE - GREEN
GRÜNE - VERT
■ GEOTEC 50
▲ HONDA
▲▲ HONDA GX160
699 556